Dynamic®

MASTER SERIES

MX 91-410

Ref : MX005

DESCRIPTION

- Powerful, sturdy.
- Easy to use.
- Non detachable mixer tool : ensures durability of the mixer.
- Safety button.
- Switch.
- Double insulation.
- Stainless steel mixer tube and guard for easy cleaning and perfect hygiene.
- Titanium-plated blade easy to remove.
- Variable speed optional.

USE

It allows to mix, directly in the pots, many applications including : fish soups, panades (thick soup reduced to puree), salad dressings, pancakes paste, gravies, sauces, mayonnaise, puree of vegetables lightly pulverized, porridge, raw carrots puree, fruits cream …

Capacity : 40 to 100 Liters

TECHNICAL DATA	
OUTPUT MAX	600 W
SPEED	10500 R.P.M.
VOLTAGE	110 - 120 V or 220 - 240 V
TOTAL LENGTH	715 mm
SHAFT LENGTH	410 mm
DIAMETER	110 mm
ACTUAL WEIGHT	3,4 kg

MAINTENANCE

Clean the outside of the tube and the blade protector by passing it under the faucet.

Beware of splashing that could penetrate through the engine's ventilation slots and damage it.

Put the tube with the blade protector in clear water and start the machine for 3 seconds or more to clean the inside of the blade protector.

Wash the motor block with a sponge or with a slightly damp cloth.

Never clean this machine with a water jet spray or in the dishwasher.

www.dynamicmixers.com

Dynamic - 518 rue Léo Baekeland BP57 - 85290 Mortagne sur Sèvre
Tél : +33 (0)2 51 63 02 72 • **E-mail :** contact@dynamicmixers.com
Follow us on social networks !

Made in France
Fabriqué en France

TECHNICAL SHEET
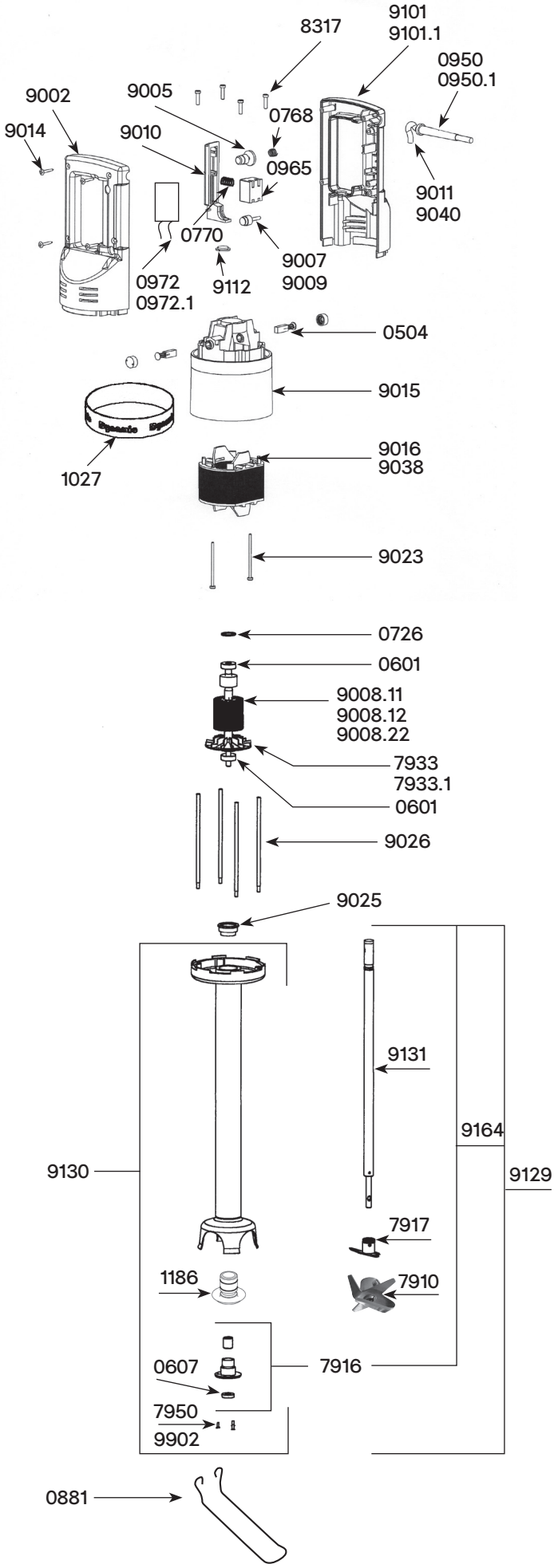
Parts list	Code
Motor brushes (2)	0504
Ball bearing	0601
Waterproof seal	0607
Squeezing washer	0726
Lock button return spring	0767
Safety button return spring	0768
Lever return spring	0770
Wall bracket	0881
Long wall bracket	0881.L
Strain relief 230 V	0950
Strain relief 115 V	0950.1
Switch (230 V / 115 V)	0965
Capacitor	0972
Capacitor + filter	0972.1
Warning label	1017
Dynamic label	1027
Label w/ serial number 230 V	1028
Label w/ serial number 115 V	1029
Bearing holder + seal	1186
Emulsifying blade	7910
Lower bearing assembly	7916
Cutter blade	7917
Fan	7933
Fan	7933.1
Lower bearing screws - Alu (3)	7950
Brace screws (4)	8317
Upper half handle (button side)	9002
Safety switch	9005
Locking switch	9007
Rotor 115 V	9008.11
Rotor 230 V	9008.12
Rotor from n° 17/00001	9008.22
Plug	9009
Control lever	9010
Power cord 230 V	9011
Handle screws (4)	9014
Motor housing brush holder	9015
Stator 230 V	9016
Stator screws (2)	9023
Ball bearing ring	9025
Braces (4)	9026
Stator 115 V	9038
Power cord 115 V	9040
Carbon brush wires 230 V	9043
Power cord (Australia)	9066
Power cord (UK)	9067
Complete handle w/ power cord 230 V	9100
Complete handle w/ power cord 115 V	9100.1
Half handle, label side (230V)	9101
Half handle, label side (115V)	9101.1
Speed control knob	9112
Complete foot assembly	9129
Foot assembly w/ bearing assembly	9130
Fitted shaft	9131
Carbon brush wires 115 V	9143
Shaft, lower bearing & cutter assembly	9164
Lower bearing screws - Stainless steel (3)	9902