ELECTRICAL COMBINED VEGETABLE SLICER / FOOD PROCESSOR

VARIABLE SPEED AND DIGITAL DISPLAY SCREEN

Ref. : CL350

- ✓ COMBINED VEGETABLE SLICER / FOOD PROCESSOR 1100 W.
- ✓ VOLTAGE 220 - 240 V / SINGLE-PHASED.
- ✓ WITH DIGITAL DISPLAY SCREEN.
- ✓ VARIABLE SPEED : VEGETABLE SLICER FUNCTION FROM 320 R.P.M. TO 720 R.P.M. AND FOOD PROCESSOR FUNCTION FROM 350 R.P.M. TO 3500 R.P.M.

VEGETABLE SLICER :

- ✓ STAINLESS STEEL PUSHER HANDLE.
- ✓ DELIVERED WITHOUT DISC.

FOOD PROCESSOR :

- ✓ 5.4 LITRES STAINLESS STEEL BOWL (RATED CAPACITY) / 4.3 LITRES (OPERATING CAPACITY).
- ✓ SMOOTH EDGED BLADE (AS STANDARD).

VARIABLE SPEED /
WITH DIGITAL DISPLAY SCREEN.

ADVANTAGES

- **French design and manufacture, guaranteed quality, robustness and repairability - The DYNAMIC vegetable slicer / food processor is easily disassembled, repairable and reassembled. DYNAMIC guarantees the immediate availability of spare parts.**
- **Thanks to its unique design, this is an extremely versatile and aesthetic device. The design is based on users' real needs: the use of first quality materials (stainless steel), thought-out ergonomics, details and tips guaranteeing hygiene and safety (patent pending).**
- **A product designed with sustainable development in mind – 80% of the materials used are made from stainless steel and aluminium.**

DESCRIPTION

- An induction motor, integrated in the metal motor block, with a power of 1100 W and a single-phased power supply of 220 - 240 V. Easy-to-use control panel.
- All parts in contact with food are easily removable and dishwasher-proof for quick cleaning.
- Magnetic detection which prevents the appliance from starting if an anomaly is detected. The appliance stops as soon as it detects any type of inappropriate use.

www.dynamicmixers.com

Dynamic - 518 rue Léo Baekeland BP57 - 85290 Mortagne sur Sèvre
Tel : +33 (0)2 51 63 02 72 • **E-mail :** export@dynamicmixers.com
Follow us on our social media accounts !

PATENTED SYSTEM · Made in France · NO BISPHENOL A BPA FREE · CE

ELECTRICAL COMBINED VEGETABLE SLICER / FOOD PROCESSOR WITH VARIABLE SPEED / Ref : CL350

DESCRIPTION

VEGETABLE SLICER FUNCTION

- Universal vegetable slicer with a large choice of stainless steel discs. All parts in contact with food are easily removable and dishwasher-proof for quick cleaning: cutting chamber, pusher, hopper and pusher handle. Thought-out ergonomics, the device is designed to be used by both left-and right-handed.
- Two hoppers to adapt to all types of vegetables: a wide hopper of 217 cm^2 for bulky vegetables such as cabbage, celeriac and a cylindrical hopper of Ø 60.5 mm for long and delicate vegetables (zucchinis, cucumbers). A side food chute with a 20 cm passage to install a deep GN collection container (20 cm).
- Optional stainless steel discs, dishwasher-proof.

FOOD PROCESSOR FUNCTION

- Food processor for mixing, emulsifying, blending and chopping in a few seconds. Variable speed from 350 to 3500 rpm. PULSE and REVERSE functions. TIMER and COUNTDOWN TIMER functions. 5.4 litres stainless steel bowl (rated capacity) + Copolyester Tritan lid, equipped with an integrated manual scraper arm to avoid waste and for improved blending. Quick release system with clip fasteners (patent pending). Ability to add ingredients during preparation without opening the lid.
- WORKING CAPACITY: from 100g to 4kg.
- Supplied with a smooth edged blade with inverted cutters, enables you to save time and helps preserve organoleptic properties (patented system).

CONSTRUCTION

- An induction motor, integrated in the motor block, ensuring robustness and reliability over time.
- Integrated air vents on the motor unit for good engine ventilation.
- Extremely solid base.
- POWER: 1100 W
- VOLTAGE : 220 - 240 V / SINGLE-PHASED.
- SPEED : vegetable slicer function from 320 rpm to 720 rpm and food processor function from 350 to 3500 rpm.
- Easy and quick to dismantle accessories without tools (patent pending).
- 5.4 litres Stainless steel bowl (rated capacity) or an operating capacity of 4.3 Litres.
- Copolyester Tritan lid without BPA (Bisphenol A).

MAIN CHARACTERISTICS OF THE VEGETABLE SLICER

- Capacity up to 300 kg/h, suitable for as much as 400 covers per service.
- Capable of grating, slicing, cutting fruits and vegetables.
- Ergonomic, ambidextrous, stainless steel pusher handle.
- All parts in contact with food are removable without tools and are dishwasher-proof.
- Easy-to-use waterproof control panel with on/off button, selected speed displayed, speed adjuster (5 speed levels). The digital display enables you to navigate on the screen and access the different operating modes: 1 fixed speed, 2 fixed speeds, variable speed.
- Very practical side disposal, without projection, enabling the use of deep collection containers.
- Automatic start with pusher-handle.
- Automatic magnetic detection for total operator safety.
- Wide choice of stainless steel discs with a diameter of 225 mm (optional).

MAIN CHARACTERISTICS OF THE FOOD PROCESSOR

- Food processor mixer, robust and reliable emulsifier for grinding, chopping, emulsifying and kneading.
- Supplied with a standard scraper arm.
- Adapted productivity for 20 to 100 covers per service.
- Removable, transparent lid with opening to add ingredients during preparation.
- All parts in contact with food are easily removable and dishwasher-proof.
- Easy-to-use waterproof control panel with on/off button, selected speed displayed, speed adjuster (10 speed levels), “PULSE” and “REVERSE” functions, TIMER and COUNTDOWN TIMER functions. The digital display enables you to navigate on the screen and access the different operating modes: 1 fixed speed, 2 fixed speeds, variable speed. The “PULSE” function enables grinding and precision work, the “REVERSE” function enables gentle mixing and preserves the added ingredient entirely.
- The digital display enables you to navigate the screen and access different operating modes: 1 fixed speed, 2 fixed speeds, variable speed.
- Automatic magnetic detection on the stainless steel bowl and lid for total operator safety.

ACCESSORIES INCLUDED

VEGETABLE-SLICER MODE

- 1 x food ejector.

FOOD PROCESSOR MODE

- 1 x stainless steel bowl with a capacity of 5.4 litres.
- 1 x lid with integrated wiper for 5.4 litres stainless steel bowl.
- 1 x smooth edged blade food processor.

OPTIONAL ACCESSORIES VEGETABLE-SLICER MODE

SLICING DISC

GRATING DISC

JULIENNE DISC

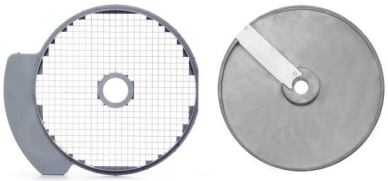

DICING KIT

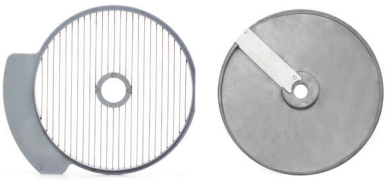

FRENCH FRIES KIT

VEGETABLE SLICER KIT

- **CL1005** ❑ 0,5MM SLICING DISC
- **CL1015** ❑ 1,5MM SLICING DISC
- **CL1025** ❑ 2,5MM SLICING DISC
- **CL1030** ❑ 3MM SLICING DISC
- **CL1040** ❑ 4MM SLICING DISC
- **CL1050** ❑ 5MM SLICING DISC
- **CL1070** ❑ 7MM SLICING DISC
- **CL1080** ❑ 8MM SLICING DISC
- **CL1090** ❑ 9MM SLICING DISC
- **CL1110** ❑ 11MM SLICING DISC
- **CL1120** ❑ 12MM SLICING DISC
- **CL1130** ❑ 13MM SLICING DISC

- **CL2002** ❑ 2MM GRATING DISC
- **CL2003** ❑ 3MM GRATING DISC
- **CL2005** ❑ 5MM GRATING DISC
- **CL2009** ❑ 9MM GRATING DISC

- **CL3032** ❑ 3X2MM JULIENNE DISC
- **CL3042** ❑ 4X2MM JULIENNE DISC
- **CL3044** ❑ 4X4MM JULIENNE DISC
- **CL3055** ❑ 5X5MM JULIENNE DISC
- **CL3052** ❑ 5X2MM JULIENNE DISC
- **CL3088** ❑ 8X8MM JULIENNE DISC

- **CL4008** ❑ DICING KIT 8X8MM

- **CL5008** ❑ FRENCH FRIES KIT 8X8MM

OPTIONAL ACCESSORIES FOOD PROCESSOR MODE

- **CL8002 :**
  SERRATED BLADE FOOD PROCESSOR FOR GRINDING, FOR HERBS, SPICES, PASTRY...

- **CL9001 :**
  COMPLETE FOOD PROCESSOR KIT : BOWL, LID AND SMOOTH BLADE.

TECHNICAL SPECIFICATIONS

GENERAL INFORMATION	
VEGETABLE SLICER DIMENSIONS	
WIDTH	400 mm
HEIGHT	475 mm
DEPTH	505 mm
FOOD PROCESSOR DIMENSIONS	
WIDTH	275 mm
HEIGHT	510 mm
DEPTH	505 mm

ELECTRICAL FEATURES	
VOLTAGE	220 - 240 V / 50 - 60 Hz
POWER	1100 W

FOOD PROCESSOR CAPACITY	
RATED CAPACITY	5.4 Litres
OPERATING CAPACITY	4.3 Litres

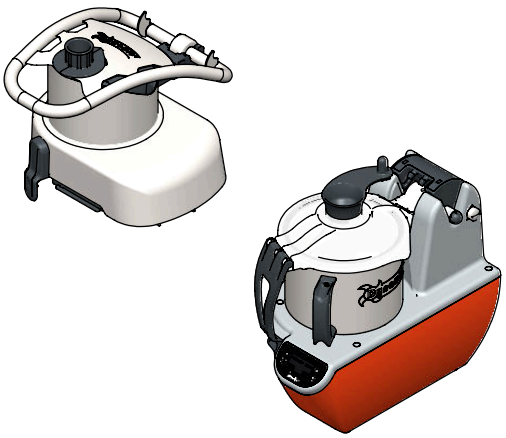
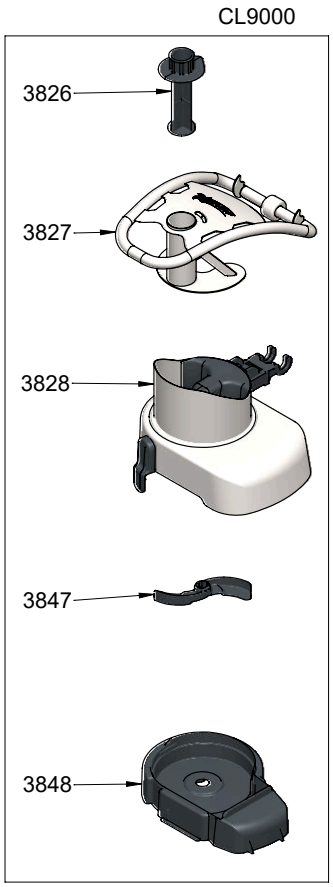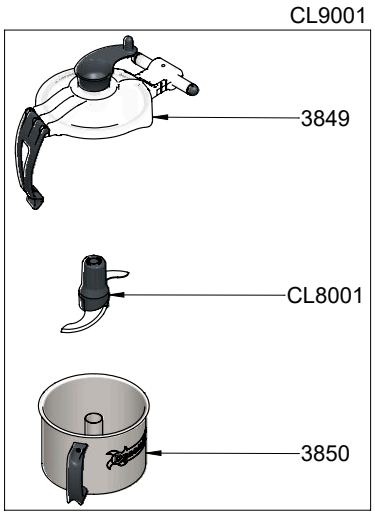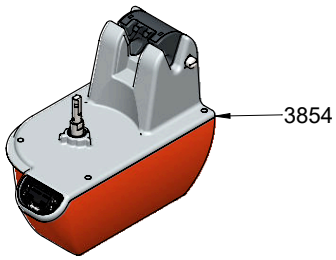
FULLY DISASSEMBLED DEVICE