ELECTRICAL FOOD PROCESSOR

WITH 2 FIXED SPEEDS

Ref. : CL212

- ✓ FOOD PROCESSOR 1100 W.
- ✓ VOLTAGE 220 - 240 V / SINGLE-PHASED.
- ✓ 2 SPEEDS : 1500 RPM AND 3000 RPM.
- ✓ 5.4 LITRES STAINLESS STEEL TANK (RATED CAPACITY).
- ✓ 4.3 LITRES (OPERATING CAPACITY).
- ✓ SMOOTH BLADE (AS STANDARD).

2 FIXED SPEEDS CONTROL PANEL

ADVANTAGES

- **French design and manufacture, guaranteed quality, robustness and repairability - The DYNAMIC food processor is easily disassembled, repairable and reassembled. DYNAMIC guarantees the immediate availability of spare parts.**
- **Thanks to its unique design, this is an extremely versatile and aesthetic device. The design is based on users' real needs: the use of first quality materials (stainless steel), thought-out ergonomics, details and tips guaranteeing hygiene and safety (patent pending).**
- **A product designed with sustainable development in mind – 80% of the materials used are made from stainless steel and aluminium.**

DESCRIPTION

- Food processor for mixing, emulsifying, blending and chopping in a few seconds. 2 fixed speeds, 1500 rpm and 3000 rpm. PULSE and REVERSE functions. 5.4 litres stainless steel bowl (rated capacity) + Copolyester Tritan lid without BPA (Bisphenol A), equipped with an integrated manual scraper arm to avoid waste and for improved blending. Quick release system with clip fasteners (patent pending). Ability to add ingredients during preparation without opening the lid.
- An induction motor, integrated in the metal motor block, with a power of 1100 W and a single-phased power supply of 220 - 240 V. Easy-to-use control panel.
- All parts in contact with food are easily removable and dishwasher-proof for quick cleaning.
- Magnetic detection which prevents the appliance from starting if an anomaly is detected. The appliance stops as soon as it detects any type of inappropriate use.
- WORKING CAPACITY: from 100g to 4kg.
- Supplied with a smooth blade with inverted cutters, enables you to save time and helps preserve sensory properties (patented system).

MAIN CHARACTERISTICS

- Food processor mixer, robust and reliable emulsifier for grinding, chopping, emulsifying and kneading.
- Supplied with a standard scraper arm.
- Adapted productivity for 20 to 100 covers per service.
- Removable, transparent lid with opening to add ingredients during preparation.
- All parts in contact with food are easily removable and dishwasher-proof.
- Easy to use waterproof control panel with on/off button, selected speed displayed 1 and 2 and "PULSE" and "REVERSE" functions. The "PULSE" function enables grinding and precision work, the "REVERSE" function enables gentle mixing and preserves the added ingredient entirely.
- Automatic magnetic detection on the stainless steel bowl and lid for total operator safety.

www.dynamicmixers.com

Dynamic - 518 rue Léo Baekeland BP57 - 85290 Mortagne sur Sèvre
Tel : +33 (0)2 51 63 02 72 • **E-mail :** export@dynamicmixers.com
Follow us on our social media accounts !

PATENTED SYSTEM · Made in France · Fabriqué en France · NO BISPHENOL A · BPA FREE · CE

CONSTRUCTION

- An induction motor, integrated in the motor block, ensuring robustness and reliability over time.
- Integrated air vents on the motor unit for good engine ventilation.
- Extremely solid base.
- POWER: 1100 W
- VOLTAGE : 220 - 240 V / SINGLE-PHASED.
- 2 FIXED SPEEDS: 1500 R.P.M. and 3000 R.P.M.
- 5.4 litres Stainless steel bowl (rated capacity) or an operating capacity of 4.3 Litres.
- Copolyester Tritan lid without BPA (Bisphenol A).

ACCESSORIES INCLUDED

- 1 x stainless steel bowl with a capacity of 5.4 litres.
- 1 x lid with integrated wiper for 5.4 litres stainless steel bowl.
- 1 x smooth edged blade food processor.

OPTIONAL ACCESSORIES

- **CL8002 :** Serrated blade food processor for grinding, for herbs, spices, pastry ...

TECHNICAL SPECIFICATIONS

FRONT

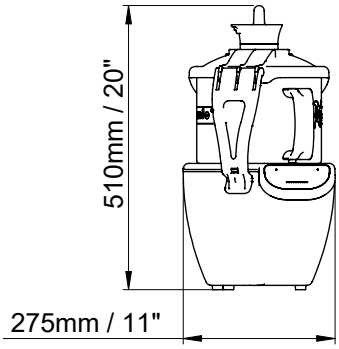

SIDE

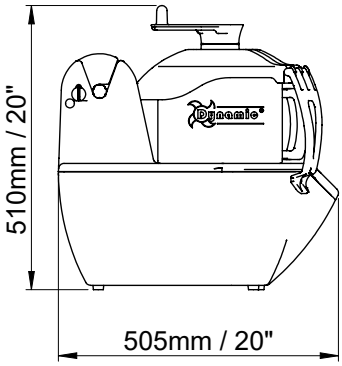

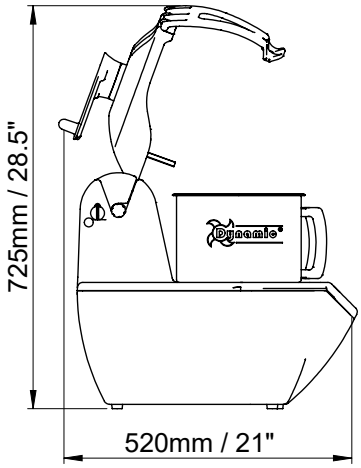

TOP

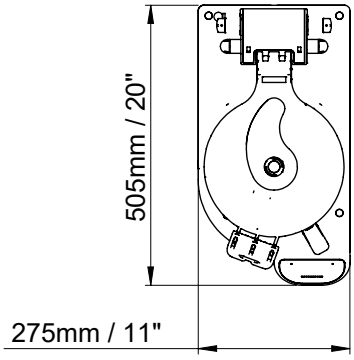

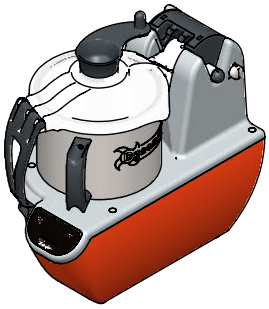

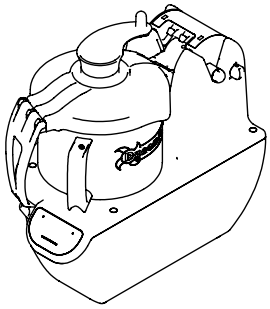

ELECTRICAL FEATURES	
VOLTAGE	220 - 240 V / 50 - 60 Hz
POWER	1100 W

CUTTER CAPACITY	
RATED CAPACITY	5.4 Litres
OPERATING CAPACITY	4.3 Litres

GENERAL INFORMATION	
WIDTH	275 mm
HEIGHT	510 mm
DEPTH	505 mm